HAL
open science

SNR Efficient Approach for the Design of Hybrid Filter Bank A/D Converters

Abla Kammoun, Caroline Lelandais-Perrault, Merouane Debbah

To cite this version:

Abla Kammoun, Caroline Lelandais-Perrault, Merouane Debbah. SNR Efficient Approach for the Design of Hybrid Filter Bank A/D Converters. 2013 IEEE International Conference on Acoustics, Speech and Signal Processing (ICASSP 2013), May 2013, Vancouver, Canada. pp.2716-2760, 10.1109/ICASSP.2013.6638150 . hal-00862740

HAL Id: hal-00862740

https://centralesupelec.hal.science/hal-00862740

Submitted on 17 Sep 2013

HAL is a multi-disciplinary open access archive for the deposit and dissemination of scientific research documents, whether they are published or not. The documents may come from teaching and research institutions in France or abroad, or from public or private research centers.

L'archive ouverte pluridisciplinaire **HAL**, est destinée au dépôt et à la diffusion de documents scientifiques de niveau recherche, publiés ou non, émanant des établissements d'enseignement et de recherche français ou étrangers, des laboratoires publics ou privés.

SNR EFFICIENT APPROACH FOR THE DESIGN OF HYBRID FILTER BANK A/D CONVERTERS

Abla Kammoun[1] *and Caroline Lelandais-Perrault*[2] *and Mérouane Debbah*[1]

Alcatel-Lucent Chair, Supélec[1], Department of Signal processing and Electronic Systems, Supélec[2]

ABSTRACT

This paper presents a new synthesis method for Hybrid Filter Banks A/D converters (HFB-ADC). As most of the classical methods minimizes a SDR criterion, which is too restrictive, this method minimizes the SNR criterion. Unlike the few methods minimizing also the SNR, this one does not involve any optimization process.

1. INTRODUCTION

The future applications of cognitive radio require digitization systems being capable to perform a flexible conversion in terms of bandwidth and resolution without increasing unreasonably the power consumption. The digitization systems based on Hybrid Filter Banks A/D converters (HFB-ADC) introduced in [1] provide an attractive solution for achieving this purpose. One difficulty is to match the synthesis filters with the analysis filters in order to reconstruct a correct wide-band signal. This paper deals with the synthesis methods that calculate off-line the optimal synthesis filters from the knowledge of the analysis filter frequency responses. Some of them try to approach the Perfect Reconstruction equations [2] [3]. In that case, the minimized criterion is a signal-to-distortion ratio (SDR). However, it is well known that this criterion is more restrictive than a SNR criterion which is typically requested in receivers. Therefore, other methods focus on minimizing the SNR. The main difficulty is that it may lead to the minimization of a non-linear criterion involving consequently an optimization process [4]. In this paper, we propose a synthesis method that minimizes the SNR of the HFB-ADC and whose the optimal solution has an analytical expression. The selected criterion is similar to the maximum shortening signal to noise ratio (MSSNR) criterion used in channel equalization for OFDM systems [5]. However, the context is very different because each path is undersampled, which leads to aliasing terms that have to be canceled. In Section 2, a very classical method that minimizes the SDR is presented in order to introduce notation and to have a reference. Section 3 presents the SNR criterion in the context of Hybrid Filter Bank A/D converters. Finally, simulations have been carried out and are presented in Section 4. Results are compared with the classical method ones.

2. CLASSICAL DESIGN METHOD

2.1. Review of theoretical principles

Fig. 1 depicts the HFB-ADC scheme. The continuous input signal $x(t)$ is assumed to be band-limited to the frequency interval $\left[-\frac{1}{2T}, \frac{1}{2T}\right]$. To avoid aliasing, the minimum sampling rate that has to be used is given by the Nyquist rate, $\frac{1}{T}$. For applications using wide-band signals, such a rate could reach high values that go beyond the ability of conventional ADCs. Instead of operating at the

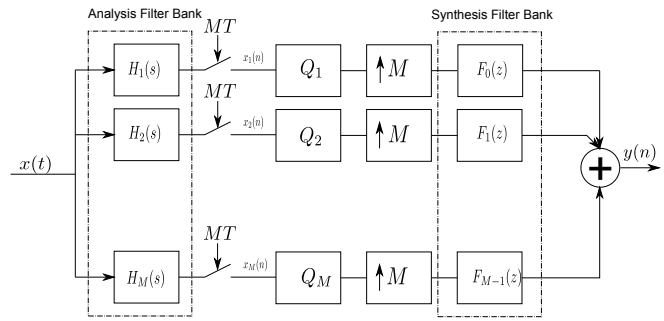

Fig. 1. Scheme of a HFB-ADC

Nyquist rate, an M branch HFB-ADC is based on the use of M band-pass analog filters referred to as an analysis filter bank in order to split up the frequency band into M parts. The output of each analog filter is then sampled at a rate of $\frac{1}{MT}$ before being quantized, through an ADC bank. Quantizers $Q_1, \cdots, Q_M$ are assumed to have the same characteristics and are modeled as an additive uniform source of noise with a constant spectral density of $\frac{10^{-\frac{6r}{10}}}{M^2}$ at all the frequency range, where r is the resolution of each ADC. Letting $E_k(e^{\jmath\Omega T})$ be the Fourier transform of the k-th quantizer noise, the Fourier transform of the output signal $y(n)$ is given by:

$$Y(e^{\jmath\Omega T}) = \sum_{k=1}^{M} F_k(e^{\jmath\omega}) X_k(e^{\jmath M\Omega T}) + E_k(e^{\jmath M\Omega T}) F_k(e^{\jmath\Omega T}) \quad (1)$$

where $X_k(e^{\jmath M\Omega T})$ is derived using the Poisson summation formula:

$$X_k(e^{\jmath M\Omega T}) = \frac{1}{MT} \sum_{p=-\infty}^{+\infty} X(\jmath\Omega - \jmath\frac{2\pi p}{MT}) H_k(\jmath\Omega - \jmath\frac{2\pi p}{MT}) \quad (2)$$

Plugging (2) into (1), we obtain:

$$Y(e^{\jmath\omega}) = \frac{1}{MT} \sum_{p=-\infty}^{+\infty} X(\jmath\Omega - \frac{\jmath 2\pi p}{MT}) \times \sum_{k=1}^{M} H_k(\jmath\Omega - \frac{\jmath 2\pi p}{MT}) F_k(e^{\jmath\omega}) + \sum_{k=1}^{M} E_k(e^{\jmath M\omega}) F_k(e^{\jmath\omega})$$

where $\omega = \Omega T$.

Since the input signal $x(t)$ is spectrally bounded, only pulsations lying on the interval $\left[-\frac{\pi}{2T}, \frac{\pi}{2T}\right]$ are considered. Considering the band-limited analysis filters $H_k^B(\jmath\omega)$:

$$H_k^B(\jmath\omega) = \begin{cases} H_k(\jmath\omega) & |\omega| \leq \frac{\pi}{2T} \\ 0 & |\omega| \geq \frac{\pi}{2T}. \end{cases}$$

Equation (3) becomes thus:

$$
\begin{aligned}
Y(e^{\jmath\omega}) &= \frac{1}{MT}\sum_{p=-M+1}^{M-1} X(\jmath\Omega - \frac{\jmath 2\pi p}{MT})\sum_{k=1}^{M} H_k^B(\jmath\Omega - \frac{\jmath 2\pi p}{MT}) \\
&\times F_k(e^{\jmath\omega}) + \sum_{k=1}^{M} E_k(e^{\jmath M\omega})F_k(e^{\jmath\omega}) \\
&= \frac{1}{MT}X(\jmath\Omega)\sum_{k=1}^{M} H_k^B(\jmath\Omega)F_k(e^{\jmath\omega}) \qquad (3) \\
&+ \frac{1}{MT}\sum_{p=1}^{M-1} X(\jmath\Omega - \frac{\jmath 2\pi p}{MT})\sum_{k=1}^{M} H_k^B(\jmath\Omega - \frac{\jmath 2\pi p}{MT})F_k(e^{\jmath\omega}) \\
&+ \frac{1}{MT}\sum_{p=1}^{M-1} X(\jmath\Omega - \frac{\jmath 2\pi p}{MT} + \frac{2\pi}{T})\sum_{k=1}^{M} H_k^B(\jmath\Omega - \frac{\jmath 2\pi p}{MT} + \frac{2\pi}{T}) \\
&\times F_k(e^{\jmath\omega}) + \sum_{k=1}^{M} E_k(e^{\jmath M\omega})F_k(e^{\jmath\omega})
\end{aligned}
$$

Due to the band-limited property of $X(\jmath\omega)$ and $H_k^B(\jmath\omega)$, we can easily check that:

$$H_k^B(\jmath\omega)H_k^B(\jmath\omega + \frac{2\pi}{T}) = 0$$

and also:

$$X(\jmath\omega)X(\jmath\omega + \frac{2\pi}{T}) = 0$$

Letting $\widetilde{X}(\jmath\omega) = X(\jmath\omega) + X(\jmath\omega + \frac{2\pi}{T})$ and $\widetilde{H}_k^B(\jmath\omega) = H_k^B(\jmath\omega) + H_k^B(\jmath\omega + \frac{2\pi}{T})$, we finally get:

$$
\begin{aligned}
Y(e^{\jmath\omega}) &= \frac{1}{MT}\widetilde{X}(\jmath\Omega)\sum_{k=1}^{M} \widetilde{H}_k^B(\jmath\Omega)F_k(e^{\jmath\omega}) \\
&+ \frac{1}{MT}\sum_{p=1}^{M-1} \widetilde{X}(\jmath\Omega - \frac{\jmath 2\pi p}{MT})\sum_{k=1}^{M} \widetilde{H}_k^B(\jmath\Omega - \frac{\jmath 2\pi p}{MT})F_k(e^{\jmath\omega}) \\
&+ \sum_{k=1}^{M} E_k(e^{\jmath M\omega})F_k(e^{\jmath\omega}) \qquad (4)
\end{aligned}
$$

Comparing $Y(e^{\jmath\omega})$ with the ideal frequency response $\frac{1}{T}\widetilde{X}(\jmath\Omega)$ that would be delivered if the signal had been sampled at a rate of $1/T$, we deduce that the frequency response of the output of the HFB-ADC is the sum of a distortion term, aliasing terms and a term capturing the effect of quantization noise:

$$
\begin{aligned}
Y(e^{\jmath\omega}) &= \frac{1}{T}\widetilde{X}(\jmath\Omega)T_0(e^{\jmath\omega}) + \sum_{p=1}^{M-1}\frac{1}{T}\widetilde{X}(\jmath\Omega - \frac{\jmath 2\pi p}{MT})T_p(e^{\jmath\omega}) \\
&+ \sum_{k=1}^{M} E_k(e^{\jmath M\omega})F_k(e^{\jmath\omega})
\end{aligned}
$$

where the distortion and the aliasing functions $T_0(e^{\jmath\omega})$ and $T_p(e^{\jmath\omega})$ are given by:

$$T_0(e^{\jmath\omega}) = \frac{1}{M}\sum_{k=1}^{M} \widetilde{H}_k^B(\jmath\Omega)F_k(e^{\jmath\omega}) \qquad (5)$$

$$T_p(e^{\jmath\omega}) = \frac{1}{M}\sum_{k=1}^{M} \widetilde{H}_k^B(\jmath\Omega - \frac{\jmath 2\pi p}{MT})F_k(e^{\jmath\omega}) \qquad (6)$$

In the classical design methods of HFB-ADC, the perfect reconstruction is defined as the condition for which the output is only a scaled, delayed and sampled version of the input up to the floor restricted by the quantization noise. This implies that the aliasing terms should be equal to zero. Mathematically speaking, this condition requires that:

$$T_p(e^{\jmath\omega}) = \begin{cases} ce^{-\jmath\omega\rho} & p = 0, \rho \in \mathbb{R}_*^+, c \in \mathbb{R}^* \\ 0 & p \in \{1, \cdots, M-1\} \end{cases}$$

where ρ is the HFB-ADC overall delay and c is the scale factor.

2.2. Design of the synthesis filters

The classical design methods are based on the resolution of the perfect reconstruction equations. If the design step does not take into account the quantization noise, the synthesis filter function $\mathbf{F} : \omega \mapsto \mathbf{F}(e^{\jmath\omega}) \triangleq [F_1(e^{\jmath\omega}), \cdots, F_M(e^{\jmath\omega})]^{\mathrm{T}}$ is designed so that it minimizes the following cost function [2]:

$$
\begin{aligned}
C_0(\mathbf{F}) &= \frac{1}{2\pi}\int_{-\pi}^{\pi} \left|T_0(e^{\jmath\omega}) - ce^{-\jmath\omega\rho}\right|^2 d\omega \\
&+ \frac{1}{2\pi}\int_{-\pi}^{\pi}\sum_{p=1}^{M-1} |T_p(e^{\jmath\omega})|^2 d\omega
\end{aligned}
$$

In practice, it is of interest to keep the quantization noise at a low level, in addition to the cost function C_0. Hence, we rather consider the cost function which linearly combines the distortion error with the aliasing and quantization noises [6]:

$$
\begin{aligned}
C(\mathbf{F}) &= \frac{1}{2\pi}\int_{-\pi}^{\pi} \left|T_0(e^{\jmath\omega}) - ce^{-\jmath\omega\rho}\right|^2 d\omega + \frac{\lambda}{2\pi}\int_{-\pi}^{\pi}\sum_{p=1}^{M-1} |T_p(e^{\jmath\omega})|^2 d\omega \\
&+ \frac{\lambda}{2\pi}\int_{-\pi}^{\pi}\sum_{k=1}^{M} |F_k(e^{\jmath\omega})|^2 |E_k(e^{\jmath M\omega})|^2 d\omega \\
&= \frac{1}{2\pi}\int_{-\pi}^{\pi} \left|T_0(e^{\jmath\omega}) - ce^{-\jmath\omega\rho}\right|^2 d\omega + \frac{\lambda}{2\pi}\int_{-\pi}^{\pi}\sum_{p=1}^{M-1} |T_p(e^{\jmath\omega})|^2 d\omega \\
&+ \frac{\lambda\sigma^2}{2M^2\pi}\int_{-\pi}^{\pi}\sum_{k=1}^{M} |F_k(e^{\jmath\omega})|^2 |d\omega.
\end{aligned}
$$

where $\sigma^2 = 10^{\frac{-6r}{10}}$ and λ is a regularization term weighting the quantization and aliasing noises. Let

$$\mathbf{T}(e^{\jmath\omega}) = [T_0(e^{\jmath\omega}), \cdots, T_{M-1}(e^{\jmath\omega})]^{\mathrm{T}}$$

and

$$\mathbf{B}(e^{\jmath\omega}) = \left[ce^{-\jmath\omega\rho}, 0, \cdots, 0\right]^{\mathrm{T}}.$$

Then $C(\mathbf{F})$ could be written as:

$$C(\mathbf{F}) = \frac{1}{2\pi}\int_{-\pi}^{\pi} \|\mathbf{\Lambda}\mathbf{T}(e^{\jmath\omega}) - \mathbf{B}(e^{\jmath\omega})\|^2 d\omega + \frac{\lambda\sigma^2}{2M^2\pi}\int_{-\pi}^{\pi} \|\mathbf{F}(e^{\jmath\omega})\|^2 d\omega \qquad (7)$$

where,

$$\mathbf{F}(e^{\jmath\omega}) = [\mathbf{F}_1(e^{\jmath\omega}), \mathbf{F}_2(e^{\jmath\omega}), \cdots, \mathbf{F}_M(e^{\jmath\omega})]^T$$

Writing (5) and (6) in a matrix format, it is easy to see that :

$$\mathbf{T}(e^{\jmath\omega}) = \frac{1}{M}\mathbf{H}(\jmath\frac{\omega}{T})\mathbf{F}(e^{\jmath\omega})$$

$\mathbf{H}(\frac{\jmath\omega}{T})$ being the $M \times M$ matrix whose $(m,n)^{\text{th}}$ element is given by :

$$\left[\mathbf{H}(\frac{\jmath\omega}{T})\right]_{m,n} = \widetilde{H}_n(\jmath\Omega - \jmath(m-1)\frac{2\pi}{MT})$$

and $\mathbf{\Lambda}$ is the diagonal matrix whose the diagonal elements are equal to λ, except those indexed by $Mk+1, k \in [0, N-1]$ which are equal to 1. Considering a grid of N equally spaced frequencies ω_k, the first integration in (7) can be approximated by the average over the considered frequencies. Therefore, the problem amounts to minimizing:

$$C(\mathbf{F}) = \frac{1}{N}\|\mathbf{\Lambda}_N\mathbf{H}_N\mathbf{F}_N - M\mathbf{B_N}\|^2 + \frac{\lambda\sigma^2}{2\pi}\int_{-\pi}^{\pi}\|\mathbf{F}(e^{\jmath\omega})\|^2 d\omega \tag{8}$$

where:

$$\mathbf{F}_N = \left[\mathbf{F}(e^{\jmath\omega_1})^T, \cdots, \mathbf{F}(e^{\jmath\omega_N})^T\right]^T$$
$$\mathbf{B}_N = \left[\mathbf{B}(e^{\jmath\omega_1})^T, \cdots, \mathbf{B}(e^{\jmath\omega_N})^T\right]^T$$

and the analysis matrix $\mathbf{H}_N$ is the block diagonal matrix given by:

$$\mathbf{H}_N = \begin{bmatrix} \mathbf{H}(\frac{\jmath\omega_1}{T}) & \mathbf{0} & & \\ & \mathbf{H}(\frac{\jmath\omega_2}{T}) & \mathbf{0} & \\ & \mathbf{0} & \ddots & \\ & & & \mathbf{H}(\frac{\jmath\omega_N}{T}) \end{bmatrix}$$

and $\mathbf{\Lambda}_N$ is the $MN \times MN$ block diagonal matrix with identical blocks given by $\mathbf{\Lambda}$. For practical reasons, the synthesis filters are assumed to have finite impulse responses, i.e.,

$$F_k(e^{\jmath\omega}) = \sum_{\ell=1}^{L} f_k(\ell)e^{-\jmath\omega(\ell-1)}, \quad \forall k \in \{1, \cdots, M\},$$

where L is the order of each filter F_k, and $\{f_k(\ell), \ell = 1, \cdots, L\}$ is its corresponding impulse response. Let us designate by $\mathbf{f}_k = [f_k(1), \cdots, f_k(L)]^{\mathrm{T}}$ the k-th synthesis filter, and define$\mathbf{f} = [\mathbf{f}_1^{\mathrm{T}}, \cdots, \mathbf{f}_M^{\mathrm{T}}]^{\mathrm{T}}$. The frequency response of the synthesis filters depends linearly on the time coefficients:

$$\mathbf{F}(e^{\jmath\omega_i}) = \mathbf{A}(e^{\jmath\omega_i})\mathbf{f}$$

where

$$\mathbf{A}(e^{\jmath\omega_i}) = \mathbf{I}_M \otimes \left[1, e^{-\jmath\omega_i} \cdots, e^{-\jmath\omega_i(L-1)}\right]^{\mathrm{T}}$$

Hence,

$$\mathbf{F}_N = \mathbf{A}\mathbf{f} \tag{9}$$

where

$$\mathbf{A} = \left[\mathbf{A}(e^{\jmath\omega_1})^{\mathrm{T}}, \cdots \mathbf{A}(e^{\jmath\omega_N})^{\mathrm{T}}\right]^{\mathrm{T}}$$

Plugging (9) into (8) and using the fact that $\frac{1}{2\pi}\int_{-\pi}^{\pi}\|\mathbf{F}(e^{\jmath\omega})\|^2 d\omega = \|\mathbf{f}\|^2$ and that $\mathbf{f}$ is real, the optimization of (8) with respect to $\mathbf{f}$ yields:

$$\mathbf{f} = \left(\frac{1}{N}\mathbf{A}^{\mathrm{H}}\mathbf{H}_N^{\mathrm{H}}\mathbf{\Lambda}_N^2\mathbf{H}_N\mathbf{A} + \frac{1}{N}\mathbf{A}^{\mathrm{T}}\mathbf{H}_N^{\mathrm{T}}\mathbf{\Lambda}_N^2\mathbf{H}_N^*\mathbf{A}^* + 2\lambda\sigma^2\mathbf{I}_N\right)^{-1}$$
$$\times\left(\frac{M}{N}\mathbf{A}^{\mathrm{T}}\mathbf{H}_N^{\mathrm{T}}\mathbf{\Lambda}_N^{\mathrm{T}}\mathbf{B}_N^* + \frac{M}{N}\mathbf{A}^{\mathrm{H}}\mathbf{H}_N^{\mathrm{H}}\mathbf{\Lambda}_N^{\mathrm{H}}\mathbf{B}_N\right)$$

Note: It has been already shown that a slight oversampling of the input signal can considerably enhance the performance of the HFB-ADC [2]. This is equivalent to assuming that the input spectrum is limited to $\left[-\frac{1}{T}(1-\alpha), \frac{1}{T}(1-\alpha)\right]$. The design approach remains the same. The only difference is that $\widetilde{\mathbf{H}}_n(\jmath\Omega)$ is multiplied by $W(\jmath\Omega)$ given by:

$$W(\jmath\Omega) = \begin{cases} 1, & -\frac{(1-\alpha)\pi}{T} < \Omega < \frac{(1-\alpha)\pi}{T} \\ \epsilon & \text{otherwise} \end{cases}$$

3. PROPOSED DESIGN METHOD

The principle of classical HFB-ADC synthesis method is to determine the synthesis filters that approach in a mean square sense the ideal synthesis filters that achieve Perfect Reconstruction. Since for finite filter orders, this approximation could not be sufficiently tight, this strategy might be not optimal in the sense that it does not maximize the energy of the distortion compared to the energy of the total aliasing. Instead of picking the closest filters to the optimal ones, we select the synthesis filters in such a way to maximize the SNR defined as (10).

Let us designate by $\mathcal{I}$ the set given by $\mathcal{I} = \{1, \cdots, MN\}$, and $\mathcal{I}_d = \{kM+1, k \in \{0, 1, \cdots, N-1\}\}$ the set indexing the rows of the matrix $\mathbf{H}_N\mathbf{A}$ that correspond to distortion. Then, $\mathcal{I}_a = \mathcal{I}\backslash\mathcal{I}_d$ is the set indexing the rows of matrix $\mathbf{H}_N\mathbf{A}$ that correspond to aliasing. Let us denote $\mathbf{D}$ and $\mathbf{L}$ whose rows are respectively indexed by $\mathcal{I}_d$ and $\mathcal{I}_a$. If the number N of the considered frequencies is too high, one can approximate the distortion and aliasing energies by a sum instead of an integral sign, thereby yielding the following expression for the SNR:

$$\mathrm{SNR} = \frac{\frac{1}{N}\mathbf{f}^{\mathrm{T}}\mathbf{D}^{\mathrm{H}}\mathbf{D}\mathbf{f}}{\frac{1}{N}\mathbf{f}^{\mathrm{T}}\mathbf{L}^{\mathrm{H}}\mathbf{L}\mathbf{f} + \sigma^2\mathbf{f}^{\mathrm{T}}\mathbf{f}}$$

where $\mathbf{D}_r = \Re(\mathbf{D})$, $\mathbf{D}_i = \Im(\mathbf{D})$,$\mathbf{L}_r = \Re(\mathbf{L})$ and $\mathbf{L}_i = \Im(\mathbf{L})$. Maximizing the SNR under the constraint that the distortion energy is equal to one amounts to solving the following problem:

$$P : \min \mathbf{f}^{\mathrm{T}}\left(\frac{1}{N}\mathbf{L}_r^{\mathrm{T}}\mathbf{L}_r + \frac{1}{N}\mathbf{L}_i^{\mathrm{T}}\mathbf{L}_i + \sigma^2\mathbf{I}_{LM}\right)\mathbf{f}$$
$$\mathbf{f}^{\mathrm{T}}\left(\frac{1}{NM^2}\mathbf{D}_r^{\mathrm{T}}\mathbf{D}_r + \frac{1}{NM^2}\mathbf{D}_i^{\mathrm{T}}\mathbf{D}_i\right)\mathbf{f} = 1.$$

The solution of the problem (P) is given by the following theorem:

Theorem 1. *Let* $\boldsymbol{\mathcal{A}} = \left(\frac{1}{N}\mathbf{L}_r^T\mathbf{L}_r + \frac{1}{N}\mathbf{L}_i^T\mathbf{L}_i + \sigma^2\mathbf{I}_{LM}\right)$ *and* $\boldsymbol{\mathcal{D}} = \frac{1}{NM^2}\mathbf{D}_r^T\mathbf{D}_r + \frac{1}{NM^2}\mathbf{D}_i^T\mathbf{D}_i$. *Denote by* $\lambda_{\max}$ *the maximum eigenvalue of* $\boldsymbol{\mathcal{A}}^{-\frac{1}{2}}\boldsymbol{\mathcal{D}}\boldsymbol{\mathcal{A}}^{-\frac{1}{2}}$ *and* $\mathbf{g}$ *its corresponding eigenvector. Then, the optimal synthesis filter solving problem* (P) *is given by:*

$$\mathbf{f} = \boldsymbol{\mathcal{A}}^{-\frac{1}{2}}\mathbf{g}/\sqrt{\lambda_{\max}}.$$

4. SIMULATION RESULTS

In this section, we compare the performance of the proposed design method with that of the classical one with respect to the filter order and the ADC resolution. In all our simulations, we assume that the analysis bank consists of $M = 4$ RLC band-pass filters, and that an oversampling ratio of 8% is used. For both methods, the number of frequencies N used in the design step is set to 512. A weighting factor λ equal to 20 has been chosen in the classical design method.

$$\mathrm{SNR} = \frac{\frac{1}{2\pi}\int_{-\pi}^{\pi}|T_0(e^{\jmath\omega})|^2 d\omega}{\sum_{p=1}^{M-1}\frac{1}{2\pi}\int_{-\pi}^{\pi}|T_p(e^{\jmath\omega})|^2 d\omega + \sum_{k=1}^{M}\frac{1}{2\pi}\int_{-\pi}^{\pi}|E_k(e^{\jmath M\omega})|^2|F_k(e^{\jmath\omega})|^2 d\omega} \tag{10}$$

$$= \frac{\int_{-\pi}^{\pi}|T_0(e^{\jmath\omega})|^2 d\omega}{\sum_{p=1}^{M-1}\int_{-\pi}^{\pi}|T_p(e^{\jmath\omega})|^2 d\omega + \sum_{k=1}^{M}\int_{-\pi}^{\pi}\frac{\sigma^2}{M^2}|F_k(e^{\jmath\omega})|^2 d\omega} \tag{11}$$

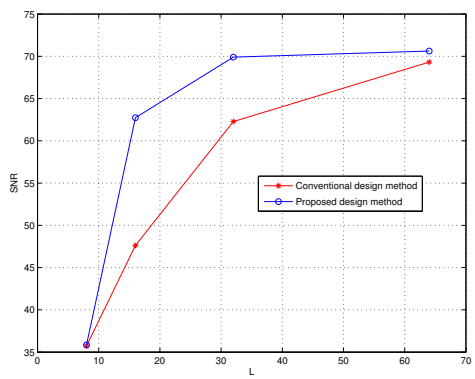

Fig. 2. Achieved SNR for different synthesis filter orders of the synthesis filter and for ADC resolution of 12 bits

4.1. Filter order

We consider a 4 branch HFB-ADC structure, where the ADC resolution is of 12 bits. Fig. 2 displays the obtained SNR when the order of the synthesis filters varies from 8 to 64. We note that the proposed design method achieves almost the maximum performance enabled by the quantization noise floor when $L = 32$, whereas the classical design method allows to reach this level of performance only for at least $L = 64$. Fig. 3 shows the SNR with respect to the frequency for both design techniques when the ADC resolution is set to 16 and $L = 32$. Note that the proposed method achieves almost an improvement of 30dB with respect to the classical one.

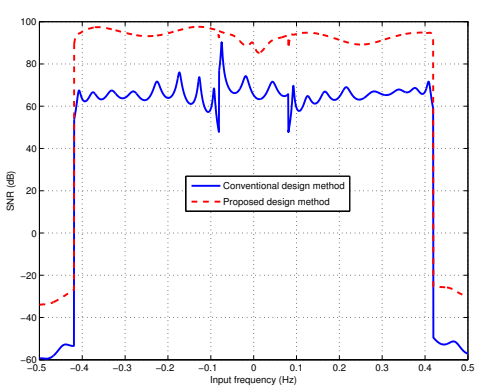

Fig. 3. SNR with respect to the input frequency for ADC resolution of 16 bits and $L = 32$

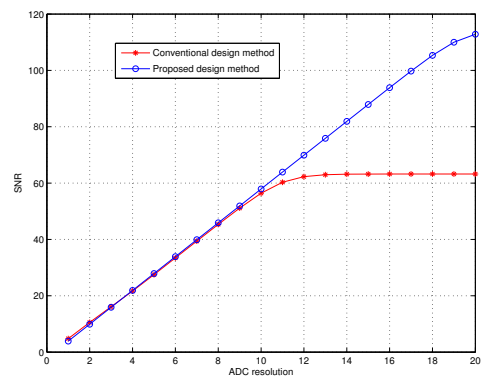

Fig. 4. Achieved SNR for different ADC resolutions for $L = 32$

4.2. ADC resolution

In a second experiment, we set the order of the synthesis filter to 32 and vary the resolution of the ADC from 2 to 20. We note that if the ADC has a low resolution, both methods achieve almost the same SNR. The gap between both design methods is up to 50dB for high ADC resolutions, which is equivalent to an enhancement of about 8 bits in the overall resolution of the HFB-ADC (Fig. 4).

Also, it has been observed that for both methods, at equal complexity in terms of number of coefficients, the digital filters have similar gains. This means that there would not be an additional power consumption in the digital filters obtained with the presented method compared to the ones obtained with the classical method.

5. CONCLUSION

In this paper, we have proposed an efficient approach for the design of Hybrid Filter Banks based A/D converters. Unlike classical methods which have been till then based on the approximation of the perfect reconstruction conditions, our method considers instead the optimization of a SNR based criterion. By relaxing the perfect reconstruction constraints, our method exhibits much better performance while keeping almost the same level of complexity in the digital part. Moreover our method is a direct method which does not involve any optimization process.

6. REFERENCES

[1] S.R. Velazquez, T.Q. Nguyen, and S.R. Broadstone, "Design of hybrid filter banks for analog/digital conversion," *Signal Processing, IEEE Transactions on*, vol. 46, no. 4, pp. 956 –967, apr 1998.

[2] C. Lelandais-Perrault, T. Petrescu, D. Poulton, P. Duhamel, and J. Oksman, "Wide-band, band-pass and versatile hybrid filter bank a/d conversion for software radio," *Circuits and Systems I: Regular Papers, IEEE Transactions on*, vol. 56, no. 8, pp. 1772 –1782, aug. 2009.

[3] D.E. Marelli, K. Mahata, and Minyue Fu, "Hybrid filterbank adcs with blind filterbank estimation," *Circuits and Systems I: Regular Papers, IEEE Transactions on*, vol. 58, no. 10, pp. 2446 –2457, oct. 2011.

[4] A. Lesellier, O. Jamin, J. Bercher, and O. Venard, "Design, optimization and realization of an hfb-based adc," in *Circuit Theory and Design (ECCTD), 2011 20th European Conference on*, aug. 2011, pp. 138 –141.

[5] Richard K. Martin, Ming Ding, Brian L. Evans, and C. Richard Johnson, "Efficient channel shortening equalizer design," *EURASIP Journal on Advances in Signal Processing 2003*, vol. 13, pp. 1279 –1290, dec. 2003.

[6] J.-L. Collette, M. Barret, P. Duhamel, and J. Oksman, "On hybrid filter bank a/d converters with arbitrary over-sampling rate," in *Image and Signal Processing and Analysis, 2005. ISPA 2005. Proceedings of the 4th International Symposium on*, sept. 2005, pp. 157 – 160.