HAL
open science

Array sub-loops reader antenna for HF RFID tracking

Megdouda Benamara, Marjorie Grzeskowiak, Miyassa Salhi, Gaelle Bazin Lissorgues, A. Diet, Yann Le Bihan

To cite this version:

Megdouda Benamara, Marjorie Grzeskowiak, Miyassa Salhi, Gaelle Bazin Lissorgues, A. Diet, et al.. Array sub-loops reader antenna for HF RFID tracking. 2017 IEEE International Conference on RFID Technology & Application (RFID-TA), Sep 2017, Warsaw, Poland. pp.100-105, 10.1109/RFID-TA.2017.8098892 . hal-01691631

HAL Id: hal-01691631

https://centralesupelec.hal.science/hal-01691631v1

Submitted on 27 Jun 2019

HAL is a multi-disciplinary open access archive for the deposit and dissemination of scientific research documents, whether they are published or not. The documents may come from teaching and research institutions in France or abroad, or from public or private research centers.

L'archive ouverte pluridisciplinaire **HAL**, est destinée au dépôt et à la diffusion de documents scientifiques de niveau recherche, publiés ou non, émanant des établissements d'enseignement et de recherche français ou étrangers, des laboratoires publics ou privés.

Open Archive Toulouse Archive Ouverte (OATAO)

OATAO is an open access repository that collects the work of some Toulouse researchers and makes it freely available over the web where possible.

This is an author's version published in: https://oatao.univ-toulouse.fr/23838

Official URL: https://doi.org/10.1109/RFID-TA.2017.8098892

To cite this version :

Benamara, Megdouda and Grzeskowiak, Marjorie and Salhi, Miyassa and Lissorgues, Gaëlle and Diet, Antoine and Le Bihan, Yann Array sub-loops reader antenna for HF RFID tracking. (2017) In: 2017 IEEE International Conference on RFID Technology & Application (RFID-TA), 20 September 2017 - 22 September 2017 (Warsaw, Poland)

Any correspondence concerning this service should be sent to the repository administrator: tech-oatao@listes-diff.inp-toulouse.fr

Array Sub-Loops Reader Antenna for HF RFID Tracking

M. BENAMARA,M. GRZESKOWIAK, M.SALHI, G. LISSORGUES
ESYCOM EA 2552 (UPEMLV, ESIEE-Paris, CNAM)
Cite Descartes, BP99, 93162 Noisy le Grand, France
Cite Descartes, F. 77454 Marne-la-Vallée, France
benamara@univ-mlv.fr

A. DIET, Y. LE BIHAN
GEEPS (PIEM) UMR 8507, Univ. Paris Saclay
F. 91192 Gif sur Yvette, France

***Abstract*—this paper focuses on tracking and objects identification by means of High Frequency magnetic coupling RFID (Radio Frequency IDentification) at 13, 56 MHz. The coil of the used RFID tags corresponds to 1.9% of the reader coil surface (120x160 cm²). To increase the size ratio between the two coils, we proposed the use of multiple twisted loops antenna. The reader antenna is consequently divided into four sub-loops, corresponding to 8% of the surface of each one of the sub-loops area. According to the principle of twisted loop antenna, the nearest sub-loops are feed by current in opposite phase (complementary loops principle), and. This structure creates a strength curvature of magnetic field lines between each two of them, improving the magnetic coupling for vertical magnetic dipoles. In contrast, the structure presents at its center a null of magnetic field intensity due to the symmetry. To avoid this inconvenient a resonator is added to the structure to broke the symmetry and modify the magnetic field distribution. Its positioning is studied to optimize RFID detection in different angular and lateral positioning of the tag. Simulations and measurements of the proposed design with and without resonator are presented in the different parts of this paper.**

Keywords—magnetic coupling; RFID; mutual inductance; detection; array sub-loops antenna

I. INTRODUCTION

Radio Frequency Identification (RFID) at 13.56 MHz is currently used in several applications such as transport, security and tracking. The study concerns especially surgical instruments identification and tracking using HF (High Frequency) RFID system, this means the use of small tag coil (the tag coil size is defined according to the size of the object to identify). Additionally, it is identified a high interest in optimizing the detection of freely moving small size tags. In HF RFID system, the physical link between the reader and the tag coils is the magnetic mutual coupling phenomenon. Detection is performed when the variation of the chip impedance of the tag is correctly interpreted by the reader, according to the principle of load modulation. This is possible if the magnetic coupling between the reader and the tag coil is sufficiently strong. The communication between the reader and the tag occurs when the magnetic field lines generated by the reader coil are perpendicular to the surface of the tag coil. According to this principle, the performance of detection depends on all parameters that can act on the magnetic field distribution, by the way of geometry or current phases that influence the magnetic vectors. We can enumerate the shape, the size and the electrical properties of both the reader and the tag coils, and also the distance and angular positioning between them [1-5].

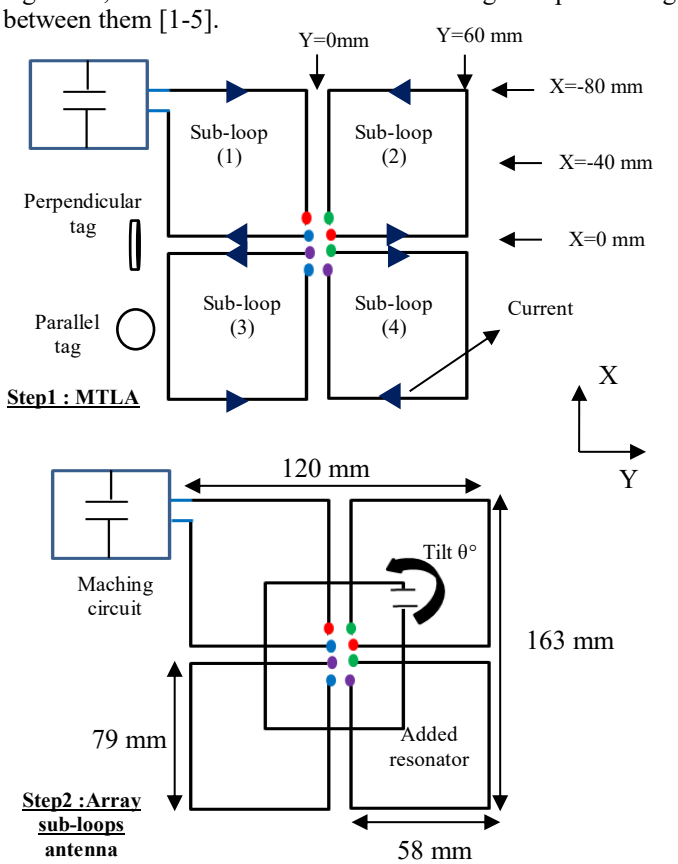

Fig. 1. Poposed MTLA design and array sub-loops antenna

In tracking RFID system, the tag coil has a small dimension compared to the reader coil, implying to perform a detection of moving tag in different angular positioning. In this case, optimizing the tag detection is currently done by changing the shape of the conventional (circular or rectangular) reader coil. In the context of small misaligned tag, several studies are proposed to improve RFID detection [6-12]. In [12] reader antenna including resonator is proposed.

The distance of detection is improved by the strengthening magnetic field above the surface of the resonator. This structure presents limits for detection of tag in no parallel configuration. To avoid this limit, the twisted loop antenna is proposed in [8]. The antenna corresponds to two close loops, fed by currents in opposite phases. This improves RFID detection because of the curvature of the magnetic field lines between these two loops common edge. In this paper, the principles of twisted loop antenna and reader antenna including resonators are used to create a multiple twisted loop antenna (MTLA) including a resonator (Fig.1).

The proposed design is used to detect small tags of 11 mm radius in different angular positioning (parallel and perpendicular) (Fig.1). The figure of merit is to maximize the magnetic coupling between the reader and the tag coils at the frequency of 13.56 MHz. The proposed MTLA corresponds to four complementary sub coils of 79 x 58 mm. The tag used for detection measurements is a circular coil of 22 mm diameter. The added resonator corresponds to a rectangular coil of (50 x 80 mm). The MTLA is fed by the current I (see Fig.1), the connection between the different sub-loops are presented by different colors: red to connect sub-loops 1 and 2, green to connect sub-loops 2 and 4, purple to connect sub-loops 4 and 3 and bleu to connect sub-loops 3 and 1. This connection between sub-loops enables to change the direction of the current between each sub-loops.

The study is divided into two steps: Firstly, the MTLA design is studied by simulation of the magnetic field distribution and mutual inductance. Secondly, the resonator is added at the surface of the MTLA to perform the array sub-loops antenna. In this part the optimization is done by changing the position tilt angle of the resonator over the MTLA ($0°<\theta<90°$). The improvement of RFID detection is validated by measurements. Analytical formulas defining the mutual inductance in the case of the MTLA and the array sub-loops antenna are developed in each part.

II. STEP1 :MTLA

One of the proposed reader antenna designs to improve RFID detection is the TLA (Twisted Loop Antenna). Its principle is changing the orientation of the magnetic field lines generated by conventional loop antenna (as known, the orientation of the magnetic field lines depends on the current direction). In this part, the MTLA design is studied by simulation of magnetic field and mutual inductance.

A. Magnetic field

The principle of the MTLA is the reduction of the ratio between the sizes of the reader and the tag coils. This can improve the magnetic coupling between them; this is the first principle of twisted loops. Also, the rotation of the magnetic field lines between the juxtaposed loops improves detection for the angular misalignment of the tag.

In fig.2, the generated magnetic field by the MTLA is reported. The magnitude in the (X, Y) plans has maxima at the edges of the sub-loops of the MTLA and minima at the surface of the sub-loops. At the center of the MTLA (X=0mm, Y=0mm), there is a zero of the generated magnetic field by the MTLA because of the sum of the magnetic field generated by each sub-loop (as the amplitudes of the generated magnetic field by each sub-loop are equal, their sum will be nil because of the opposite directions). In (Y, Z) plans, the generated magnetic field at X=-40 mm (Fig.2.c) is more important compared to X=-0 mm (Fig.2.b). The distribution of the generated magnetic field by the MTLA is depending on the orientation of the magnetic field lines between the juxtaposed coils. Between each juxtaposed sub-loops we can see a rotation of the magnetic field (see Fig2.d). For example, between the sub-loops (1 and 2), the rotation of the magnetic field lines can be seen at (X, Y) plans, while between sub-loops (1 and 3), the rotation of the magnetic field lines can be seen only in (X, Z) plans. Optimizing RFID detection needs to have the surface of the tag perpendicular to the generated magnetic field lines, the MTLA can be benefic for all possible configuration of the tag coil.

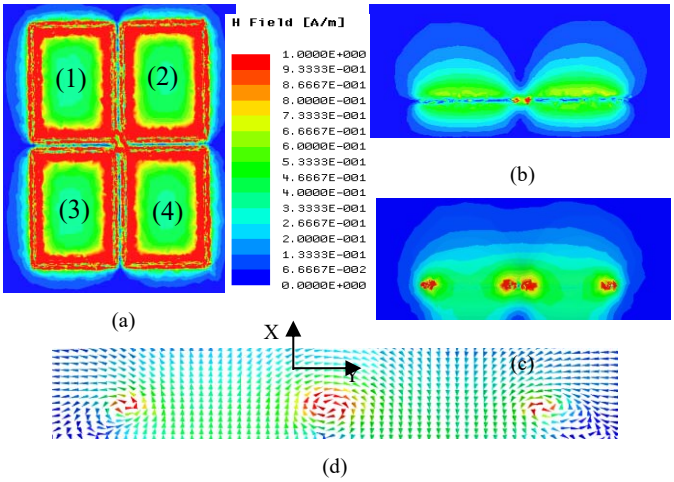

Fig. 2. Magnetic field generated by the MTLA in (X, Y) plans (a) and (Y, Z) plans at X=0 mm (b) and X=-40mm (c). (d) is the distribition of magnetic field lines at X=-40mm

B. Mutual inductance

In HF RFID systems, the mutual inductance is calculated from the magnetic coupling between the reader and the tag coils. In this part of HF RFID system the communication corresponds to the conventional link of near field communication: the mutual inductance can be calculated from the impedance matrix parameters [12].

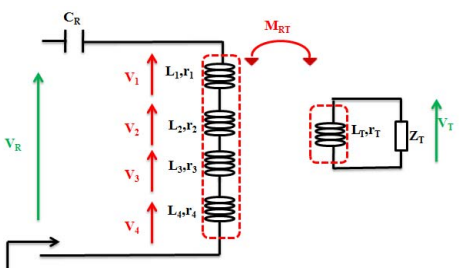

Fig. 3. Electrical model of the MTLA and the tag coils

To calculate the mutual inductance between the MTLA and the tag, the electrical model of the system is used (Fig.3). The coils of the reader and the tag are modeled by inductances L_i and their serial resistance r_i (in the MTLA system the inductance of the system corresponds to the sum of four inductances). In The reader part, a capacitance is added to tuning the frequency at 13.56 MHz. The tag is represented by and an inductance with a chip. The inductances and the serial resistances are respectively 7 uH and 9 Ω for the MTLA and 58 nH and 0.075Ω for the tag coil.

According to the theoretical calculations of the equivalent mutual inductance in the case of the TLA in [8] the mutual inductance in the case of MLTA can be calculated by (1):

$$M_{RT} = M_{1T} + M_{2T} + M_{3T} + M_{4T} \quad (1)$$

Where:M_{1T}, M_{2T}, M_{3T} and M_{4T} are the mutual inductances between each sub-loop and the tag.

This equation is used to evaluate mutual inductance by HFSS simulation. Results are reported in Fig.4. The evolution of mutual inductance is reported for Y misalignment (From -80mm to 80 mm and three different positions of X: X=-80 mm, X=-40 mm and X=0 mm corresponding respectively to the edges of the MTLA, the center of the sub-loops 1 and 2 and the center of the MTLA (between sub-loops 1 and 3, 2 and 4).

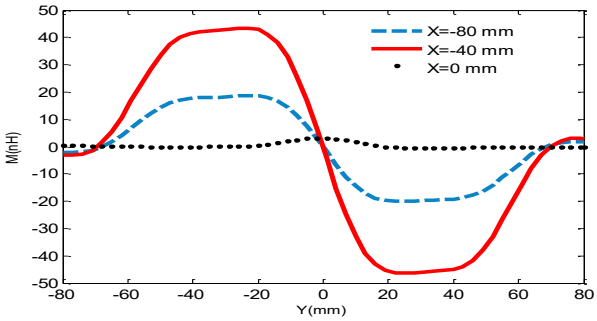

(a)

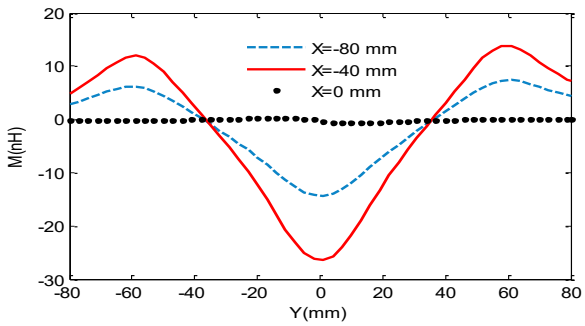

(b)

Fig. 4. Mutual inductance for parallel (a) and perpendicular (b) conficuration

From the results, in parallel configuration, the mutual inductance has homogeneous values around 45 nH and 20 nH respectively for X=-40 mm and X=-80 mm. At the center of the MTLA (X= 0mm), the mutual inductance is equal to zero nH for the different values of the Y misalignment except the interval Y=-10mm to Y=10mm, where the mutual inductance has a values of 2nH. The opposite sign of the mutual inductance between the two juxtaposed sub-loops [from -80 mm to 0 mm and from 0 mm to 80 mm] is explained by the opposite current direction between them. Also, the MTLA permits to improve mutual inductance at the intersection zone (between each two sub-loops). In this configuration the maximum of mutual inductance is obtained at the center of the sub coils (X= -40 mm) and the minimum is obtained at its center (X= 0 mm). For perpendicular configuration, the mutual inductance has three maxima corresponding to the edges of the MTLA (Y=±60 mm) and its center (Y=0mm). The best configuration is seen at Y= 0mm where the mutual inductance corresponds to the sum of the mutual inductances between the tag and the juxtaposed sub-loops. For X variation, the mutual inductance is better for X=-40 mm corresponding to the center of the sub-loops. At the center of the MTLA (X= 0mm) the mutual inductance is negligible (around 0 nH).

To improve mutual inductance between to MTLA and the tag, more specially at the center of the MTLA (X=0mm), an array sub-loops reader antenna is proposed in the next part of this paper. A resonator is added at the surface of the MTLA to create the array sub-loops antenna.

III. STEP II : ARRAY SUB-LOOPS ANTENNA

The interest of the proposed array sub-loops antenna is developed in this part for simulation results of magnetic field and mutual inductance. The used resonator has an inductance of 0.29 µH.

A. Magnetic field

The magnitude of the generated magnetic field by the array sub-loops antenna is presented in fig.5 (in (X, Y) plan) for different positions of the resonator (θ=0°, θ=45°, θ=90° and θ=135°).

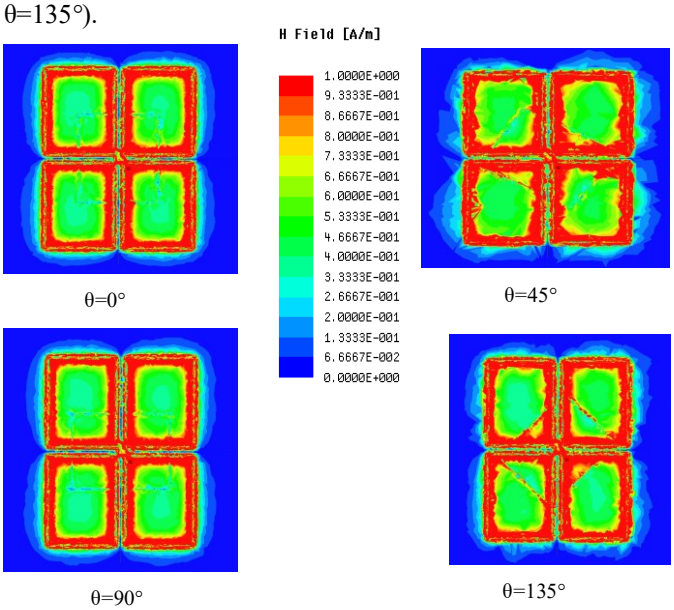

Fig. 5. Generated magnetic field by the array sub-loops antenna for different resonator tilts

The generated magnetic field by the array sub-loops antenna for θ=0° and θ=90° is not changed compared to the case of the MTLA (the variation is negligible). The influence of the added resonator is depicted for θ=45° and θ=135°. This is due to the reparation of the magnetic field of the MTLA. From the results, the resonator added presents advantages for no symmetric positioning over the MTLA.

B. Mutual inductance

In the case of the array sub-loops antenna, the mutual inductance is transformed to the equivalent mutual inductance [12]. Its calculation is based on the mutual inductance between the MTLA and the tag, the mutual inductance between the resonator and the tag, the mutual inductance between the MTLA and the resonator and all the electrical parameters of the system. The equivalent electrical model of the array sub-loops antenna is presented in (Fig.6)

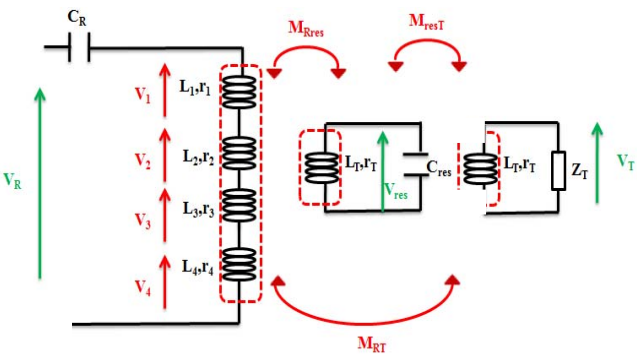

Fig. 6. . .Electrical model of the array sub-loops antenna

The equivalent mutual inductance between array sub-loops antenna and
the tag can be calculated by:

$$\begin{aligned} M_{RT} &= j\omega M_{1T} + \omega^2 M_{1res} M_{Tres} \gamma_{res} \\ &+ j\omega M_{2T} + \omega^2 M_{2res} M_{Tres} \gamma_{res} \\ &+ j\omega M_{3T} + \omega^2 M_{3res} M_{Tres} \gamma_{res} \\ &+ j\omega M_{4T} + \omega^2 M_{4res} M_{Tres} \gamma_{res} \end{aligned} \quad (2)$$

With

$$\gamma_{res} = \frac{\frac{1}{C_{res}\omega} - \omega L_{res}}{\left(\frac{1}{C_{res}\omega} - \omega L_{res}\right)^2 + r_{res}^2}$$

Where

M_{1T}, M_{2T}, M_{3T} and M_{4T} are the mutual inductances between each sub-loop and the tag.

The calculated equivalent mutual inductance is used in the simulation par to evaluate the performance of the proposed design. "Fig. 7" reports the simulated results of equivalent mutual inductance for different tilt of the resonator (θ=0°, θ=90° and θ=45°) and three different positions of Y misalignment of the tag at X=-80 mm, X=-40 mm and X= 0mm.

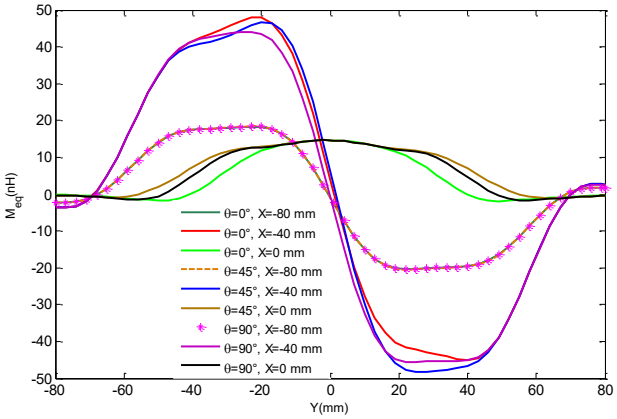

(a)

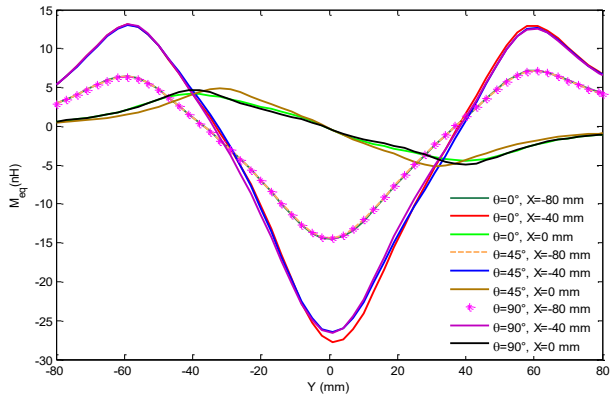

(b)

Fig. 7. Equivalent mutual inductance for array-sub-loops antenna in parallel (a) and perpendicular (b) configuration

From the results, in both parallel and perpendicular configuration, the added resonator has no effect on the equivalent mutual inductance at X=-80mm corresponding to the edges of the MTLA (±20 nH and ±7nH). The equivalent mutual inductance is similar to the mutual inductance in Fig.4. This means that the added resonator has only effect at its surface. The results can be confirmed by the generated magnetic field by the MTLA including resonator (Fig.5), where we can see that the surface of the resonator is far away from X=-80 mm for all values of the tilt θ.

For X= -40mm, in parallel configuration, the equivalent mutual inductance is increased above the surface of the sub-loops respectively by 3 nH and 4 nH for θ=45° and θ=0°. For θ=90° the added resonator has no effect on the equivalent mutual inductance, the values are comparable to the mutual inductance in Fig.4. In perpendicular configuration, the equivalent mutual inductance is increased at the zone between the sub-loops by 2nH for θ=45°. The results correspond to the generated magnetic field in field in Fig.5 where the surface of the resonator for θ=0°, θ=45° and θ=135° includes X=-40mm, while for θ=90° the edges of the resonator are distant from X=-40mm.

For X= 0mm, the improvement of equivalent mutual inductance is much more striking in parallel and perpendicular configurations compared to the case without resonator in Fig.4: 17nH (from 0nH to 17nH) in parallel configuration and 5nH (from 0nH to 5nH) in perpendicular configuration. Also, we can see that the best results are obtained for θ= 45°.

From the different simulated results (generated magnetic field and equivalent mutual inductance), the principle of added resonator and the effect of its surface tilt is validated. As conclusion of this part, the added resonator has no effect at the edges of the TLA (X=-80 mm). In the next part, the RFID detection measurements are developed for X=-40 mm and X=0 mm.

IV. Experimental Validation

The MTLA design is fabricated (Fig.8.a). Detection measurements are made for the two configurations parallel and perpendicular using a commercial reader and a commercial tag of 22 mm of diameter.

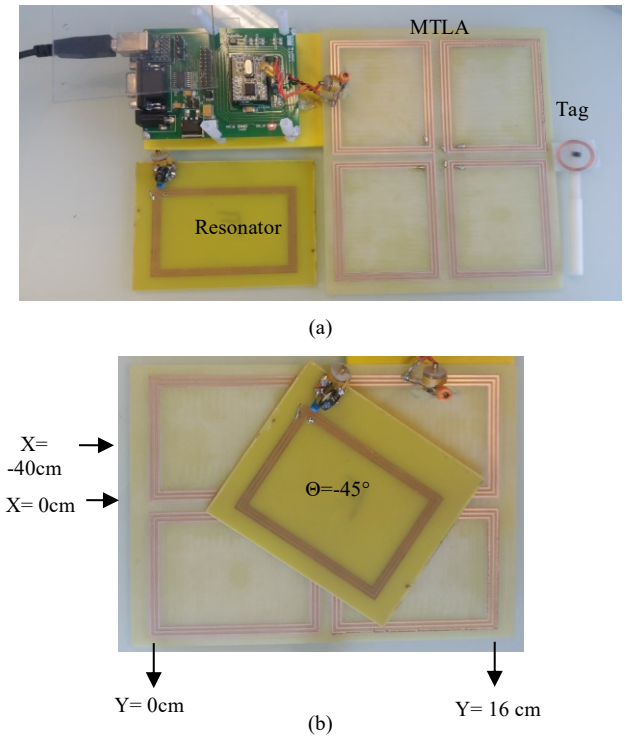

Fig. 8. Fabricated MTLA design and array sub-loops antenna

The results in Fig.9 are presented for tag misalignment at X=-40mm and X=-0mm and resonator tilts (θ=0° and θ=45°). The (X, Y) axes in Fig.9 presents respectively the tag misalignment (Y misalignment in cm) and the distance of detection (d) in cm.

From the results of detection without resonator (Fig.8.a and Fig.8.b), the surface and the distance of detection are significantly better in parallel configuration. For X=-40mm, the distance of detection has maxima of 2 cm corresponding to the surface of the sub-loops (near to the transit zone between the sub-loops), the zero detection is observed at the center of the MTLA according to the repartition of the magnetic field lines and mutual inductance. In perpendicular configuration three maxima of detection of 1.4 cm and 0.5cm are seen at the transit zones between the juxtaposed sub-loops and the edges of the sub-loops. For X=0mm, zero of detection is obtained in both parallel and perpendicular configuration.

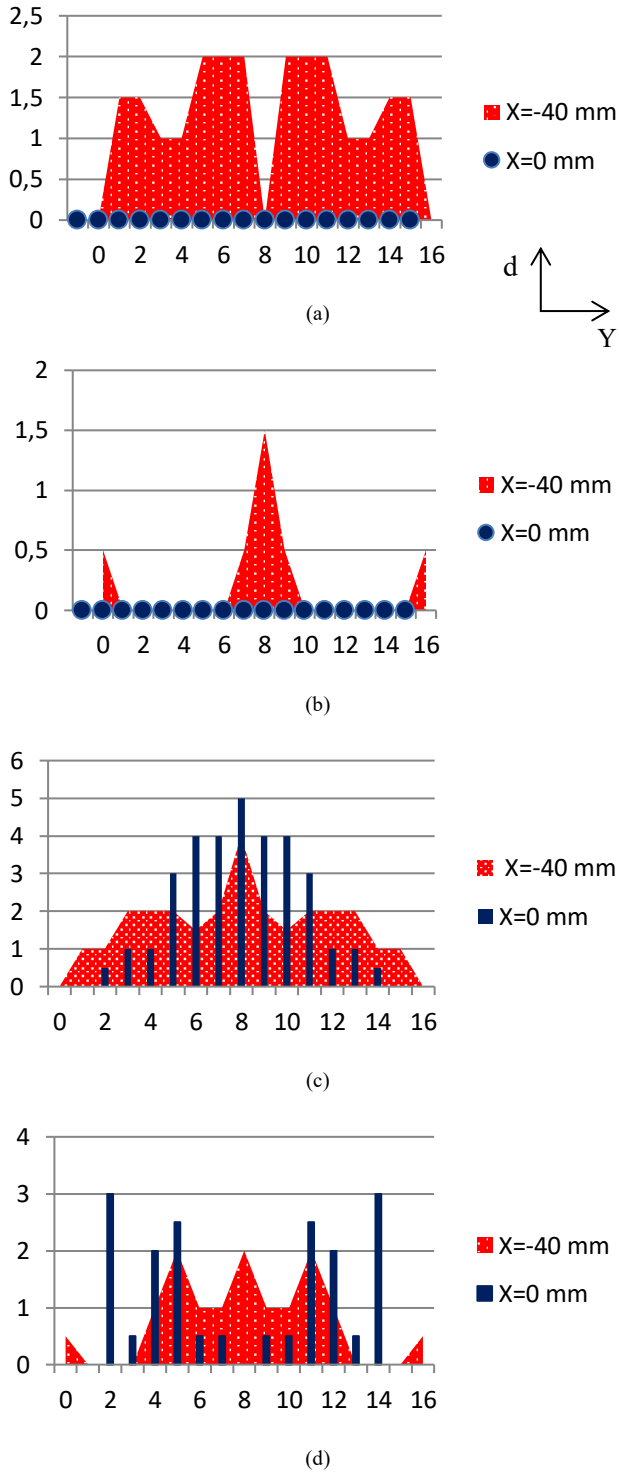

Fig. 9. RFID detection for MTLA design (a, b) and array sub-loops antenna (c, d) respectively in parallel and perpendicular configurations

The detection results confirm the results of the simulated magnetic field and mutual inductance. The MLTA design presents the advantage of the rotation of the magnetic field lines between the juxtaposed sub-loops, this improves the possibility of detection of tags in different angular misalignment but in contrast, as we can see in detection results, at the center of the MTLA the detection is not performed (a and b).

To avoid this problem we proposed the array sub-loops antenna. An experimental test of tag detection using the MTLA and a resonator is made using an RFID reader from Ib Technologies (Fig.8.b). The results are presented for the best tilt of the resonator (θ=45°).

As we can see in (Fig.9.c and Fig.9.d), the added resonator improves detection (surface and volume) in both parallel and perpendicular configuration. The maxima of distance of detection are respectively improved by 2 cm (at the center of the MTLA) and 0.5 cm (at the surface of the MTLA) in both parallel and perpendicular configurations.

For X=0mm, the results confirm the interest of using resonator by a tilt of 45°. The maxima of distance of detection are improved respectively by 5cm and 3cm in parallel and perpendicular configuration. From the results, we can see that the proposed array sub-loops antenna including the resonator doesn't only improve distance of detection but it also creates new zones of detection.

V. CONCLUSION

A design of an array sub-loops reader antenna is proposed in this paper. The study is divided on to steps. Firstly, a multiple twisted loop antenna (MTLA) is proposed. Its principle is based on the opposite current direction between the juxtaposed sub-loops. This creates the rotation of the magnetic field lines. The HF RFID performances such as magnetic field, mutual inductance and detection are developed. The proposed design antenna is benefic to improve both the surface (according to the lateral misalignment of the tag) and the volume (the distance between the reader and the tag coils) of detection at its surface but at its center a zero of mutual inductance and RFID detection is seen in both parallel and perpendicular configurations. To avoid this problem an array sub-loops antenna is proposed. The design consists on addition of coplanar resonator at the surface of the MTLA. The solution is optimized for different tilt of resonator. The results confirm that the tilt of 45° is the best configuration.

REFERENCES

[1] K. Finkenzeller. RFID Handbook. third edition, Wiley.

[2] C. Zierhofer, E. Hochmair, "Geometric approach for coupling enhancement of magnetically coupled coils". *IEEE transactions on Biomedical Engineering*, pp.708-714,1996.

[3] C. Reinhold, P. Schohl, W. John, U. Hilleringmann. Efficient antenna design of inductive coupled RFID-system with heigh power demand. Journal of communication, Vol.2,NO.6, ,pp.14-23, November 2007.

[4] S. Babic, C. Akyel, "New formulas for mutual inductance and axial magnetic force between magnetically coupled coils: thick circular coil of the rectangular cross-section-thin disk coil (pancake)", IEEE Transactions on Magnetics, Vol.49, No.2, 2013,pp.860-868,2013.

[5] M. y. Ahmed and A.S. Mohan, "Multi-loop_Bridge Antenna for impoved positionning using HF RFID", Asia-Pacific Microwave Conference , 2011

[6] H.Hirayama , Y. Satake , N.Kikuma , K.Sakakibara, "Improvement of Null Zone Avoidance Capability for HF-band RFID using Diversity Combining of Loop Antennas," in Eucap 2009, Berlin, 1963, pp. 1594 - 1597.

[7] S.-y.Gong and G.j.Xie, "Three Overlapping Loop Antennas for 3D RFID,13.56MHz Access Control Gate",International Journal of Computer Theory and Engineering, Vol. 4, No. 3, June 2012.

[8] M. Benamara, M. Grzeskowiak, A.Diet, G. Lissorgues, Y.L. Bihan, "A twisted loop antenna to enhance HF RFID detection areas for different tag positioning ," Eucap 2016, Davos

[9] E. WAFFENSCHMIDT. Homogeneous Magnetic Coupling for free positioning in inductive wireless power system. IEEE journal of emerging and selected topics in power electronics, Vol. 3, NO. 1,.pp.226-233,2015

[10] M. Grzeskowiak, A. Diet, P. S. Diao, S. Protat, C. Bourcier, Y. Le Bihan, G. Lissorgues. Pebbles Tracking Thanks to RFID LF Multi-loops Inductively Coupled Reader. Progress In Electromagnetics Research, PIER C, ISSN: 1937-8718, Vol. N°55, pp. 129-137, 2014.

[11] A. Diet, M. Grzeskowiak, Y. Le Bihan, C. Conessa, Improving LF Reader Antenna volume of detection, for RFID token tag, with a combination of ICLs and in/out-of phase multiple-loops structures, IEEE RFID-TA,pp. 208-213,2014.

[12] M.Benamara,M.Grzeskowiak, A. Diet, Y.Le.Bihan, G.Lissorgues,. "Calculation of the Equivalent Mutual Impedance in Complex HF RFID Systems", IEEE International Conference on Applied Electromagnetics and Communications (ICECOM), Dubrovnik, 2016.

.