HAL
open science

A switched reader complementary-loops structure for detecting LF RFID tagged pebbles

A. Diet, Marc Biancheri-Astier, Yann Le Bihan, Christophe Conessa, Koffi Gbafa, F. Alves, Marjorie Grzeskowiak, Megdouda Benamara, Gaelle Bazin Lissorgues, Alessandro Pozzebon

To cite this version:

A. Diet, Marc Biancheri-Astier, Yann Le Bihan, Christophe Conessa, Koffi Gbafa, et al.. A switched reader complementary-loops structure for detecting LF RFID tagged pebbles. 2017 IEEE International Conference on RFID Technology & Application (RFID-TA), Sep 2017, Warsaw, Poland. pp.1-5, 10.1109/RFID-TA.2017.8304521 . hal-01691652

HAL Id: hal-01691652

https://centralesupelec.hal.science/hal-01691652v1

Submitted on 24 Jun 2019

HAL is a multi-disciplinary open access archive for the deposit and dissemination of scientific research documents, whether they are published or not. The documents may come from teaching and research institutions in France or abroad, or from public or private research centers.

L'archive ouverte pluridisciplinaire **HAL**, est destinée au dépôt et à la diffusion de documents scientifiques de niveau recherche, publiés ou non, émanant des établissements d'enseignement et de recherche français ou étrangers, des laboratoires publics ou privés.

Open Archive Toulouse Archive Ouverte (OATAO)

OATAO is an open access repository that collects the work of some Toulouse researchers and makes it freely available over the web where possible.

This is an author's version published in: https://oatao.univ-toulouse.fr/23840

Official URL: https://doi.org/10.1109/RFID-TA.2017.8304521

To cite this version :

Diet, Antoine and Biancheri-Astier, Marc and Le Bihan, Yann and Conessa, Christophe and Gbafa, Koffi and De Oliveira Alves, Francisco and Grzeskowiak, Marjorie and Benamara, Megdouda and Lissorgues, Gaëlle and Pozzebon, Alessandro A switched reader complementary-loops structure for detecting LF RFID tagged pebbles. (2017) In: 2017 IEEE International Conference on RFID Technology & Application (RFID-TA), 20 September 2017 - 22 September 2017 (Warsaw, Poland).

Any correspondence concerning this service should be sent to the repository administrator: tech-oatao@listes-diff.inp-toulouse.fr

A switched reader complementary-loops structure for detecting LF RFID tagged pebbles

A. DIET, M. BIANCHERI-ASTIER, Y. LE BIHAN, C. CONESSA, K. GBAFA, F. ALVES
GEEPs UMR 8507
(CNRS, CentraleSupélec, Univ. Paris-Sud, UPMC)
11, rue Joliot Curie, Plateau de Moulon,
F. 91192 Gif sur Yvette, France
antoine.diet@u-psud.fr

M. GRZESKOWIAK, M. BENAMARA, G. LISSORGUES
ESYCOM EA 2552 (UPEMLV, ESIEE-Paris, CNAM)
Cite Descartes, 93162 Noisy le Grand / 77454 MLV, France

A. POZZEBON
University of Siena, Dpt. of Information Engineering and Mathematical Sciences, Via Roma 56, 53100 Siena, Italy

***Abstract* — This paper presents a reader switched complementary loops structure for pebbles RFID tracking. These so-called "smart pebbles" are tagged with LF RFID glasstags and deployed on beaches, in the context of coastal morpho-dynamics survey. At different periods, the detection of these pebbles over the beach has to be done in the minimum of time. The goal of the project LARGE is to provide a RFID reader antenna structure for reducing the time of the glasstags detection. Technical challenges are that LF glasstags detection is very sensitive to its orientation. As the prototype has to adapt to an unknown orientation and depth of the RFID tags, two key ideas are exploited in this work: (i) the use of complementary loops for reducing the orientation sensitivity and (ii) the switching in loop sizes for adapting to optimal depth of tag detection. A prototype is build and tested with a commercial RFID reader and conclusions of our measurements show that detection performances can be increased with this multiple loops and complementary loops structure.**

Keywords— LF RFID, complementary loops, mutual coupling

I. THE CONTEXT OF PROJECT "LARGE"

RFID technology is widely used for tracking objects and or animals in various environments, including applications in an outdoor context [1][2][3][4]. The operating frequency between the RFID reader/interrogator and the transponders (tags), is the discriminant factor due to multiple tradeoffs mainly concerning the detection range, data rate transfer and sensitivity to the environment (water, metal…). The RFID chosen band of frequency consequently determines the electromagnetic physical link to be in near-field (magnetic coupling at LF 125/134 kHz, or HF 13,56 MHz) or alternatively in far-field (backscattering of radiating waves, usually in UHF 433/860 MHz and sometimes at 2,4 GHz).

In this paper, we focus on tracking pebbles, on the beach, as a part of the project called LARGE (LocAlisation with Rfid of tagGed pEbbles). The key idea is to insert on the beach some tagged pebbles and to recover them at different time slots in order to build a behavioral model of their displacements due to the coastal morpho-dynamics. As salt water and sand are present, the choice of LF frequency band is preferred. LF RFID tags are dedicated technology for this type of study in that it can be efficiently used to track the movements of sediments on coarse grained beaches, for both the under and outside sections of a beach. As a consequence, LF RFID tags can be embedded inside autochthonous pebbles turning them into tracers that can be positioned directly on the beach. These tracers can be then detected, identified and possibly recovered to study their movements and variations in terms of size and shape. These data are fundamental to evaluate the effects of coastal erosion on a beach and to plan the countermeasures to be deployed [3]. LF is the only frequency band that can be employed in such a scenario in that is the only one that is able to provide a Long Range communication channel even under sea water, allowing the detection of Smart Pebbles also in the submerged portion of a beach. Tags on pebbles has a minimum volume and the dedicated structure is a *glasstag* type which is typically made of a 1-1,5 cm long ferrite rod, with diameter in the range of 1-2 mm with enameled copper wire soldered to a RFID chip. As resumed in Figure 1, The RFID tag in LF enable to store and read data in presence of salt water and sand, and consequently to date and localize precisely the movement of the pebble (*the use of such data for building the morpho-dynamics behavioral model is not the subject of the paper*).

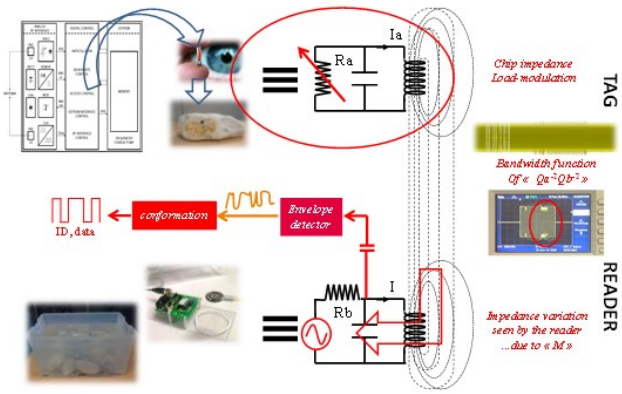

Figure 1 : Principle of pebble tagged in RFID with LF glasstag.

In LF, most of the tags does not have battery and need being powered by magnetic coupling before communicating thanks to the load-modulation (see Figure 1). Moreover, the penalty of the *glasstag* is it high sensitivity to the orientation because the ferrite rod is equivalent to a magnetic dipole with a very small effective surface due to the rod diameter value. As the pebbles can be positioned randomly, the RFID reader loop

antenna is supposed to detect them whatever their orientation. This is technologically challenging because the tag need to be powered with enough magnetic field, fruitfully distributed over the equivalent magnetic dipole surface, before being able to be detected. To improve the tag powering ability, high quality factor coils can be used, but the quality factor also reduce the bandwidth of the system and can penalize the correct interpretation of the data, preventing the detection. Consequently, a tradeoff is present on the quality factor of the transfer function between the tag and the reader, which is based on the impedance value seen by the reader, including the mutual inductance [4][5][6][7]. This mutual inductance can be defined by the Neumann formula, seen in Figure 2, where $\boldsymbol{M}$ is the value, in Henry, between two closed paths $\boldsymbol{\Gamma_1}$ and $\boldsymbol{\Gamma_2}$ where r_{12} is the distance between the two elementary vectors $\boldsymbol{dl_1}$ and $\boldsymbol{dl_2}$. The mutual inductance is exclusively based on geometrical considerations: the position and orientation of the paths (loops in classical examples).

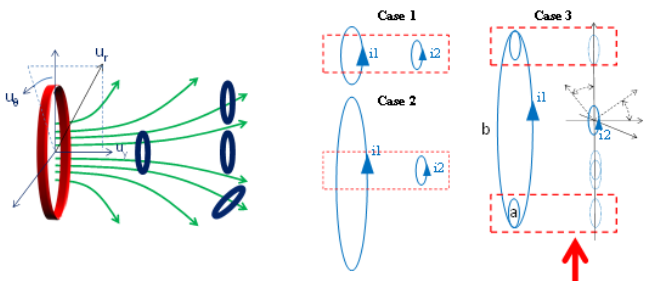

$$M = \frac{\mu_0}{4\pi}\oint_{\Gamma_1 = \Gamma_1^a + \Gamma_1^b}\oint_{\Gamma_2}\frac{\overline{dl_1}.\overline{dl_2}}{r_{12}} = \frac{\mu_0}{4\pi}\left[\oint_{\Gamma_1^a}\oint_{\Gamma_2}\frac{\overline{dl_1}.\overline{dl_2}}{r_{12}} + \oint_{\Gamma_1^b}\oint_{\Gamma_2}\frac{\overline{dl_1}.\overline{dl_2}}{r_{12}}\right] = M_a + M_b$$

Figure 2 : definition of the Mutual coupling and possible vectorial decomposition of the path in a multi(sub)-loop case

In this Figure 2, we suppose that the reader loop area is higher in size than the tag loop area, to the contrary of case 1, because of the surface of detection, which determine the total time spend to control the entire beach surface. This drives to a very week value of the mutual inductance in a case of single loop configuration (the case 2). As expressed in Figure 2 (case 3 and equation) it is possible to separate the reader loop path defined by $\boldsymbol{\Gamma_1}$ into loop sub-paths (multi-loop or series loops) $\boldsymbol{\Gamma_1^a}$ and $\boldsymbol{\Gamma_1^b}$ which will drive to the addition of the two partial mutual inductances parts, one of which being potentially better suited for mutual coupling with a given geometry, for example those of the RFID *glasstag*.

Additionally, the tag orientation implies to study the problem of mutual coupling maximization for the two possible orientation mode of the glasstag equivalent surface, which are the horizontal and vertical ones regardless to the plane defined by the reader loop surface [4][5][7]. The ability to detect in both horizontal and vertical modes is more fruitful in the case of pebbles detection than to increase the detection range in only one mode.

The idea developed in that paper is to improve the structure of the reader loop by modifying the mutual coupling in the case of a *glasstag*. The multi-loop principle is explored in that way and combined with complementary loops principle [4][5], for different size.

II. Structure of the RFID Reader Loop

The problem of detecting the tagged pebbles on the beach can be simplified by an equivalent schematic shown in Figure 3, where the beach is represented as a rectangular area.

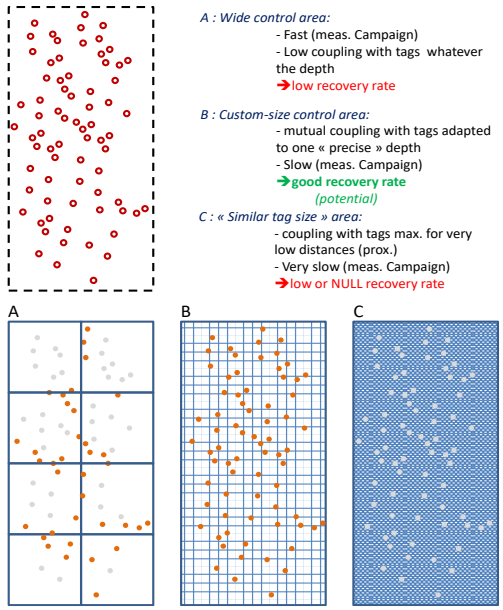

Figure 3 : Equivalent problem of RFID tagged pebbles detection and potential scenarii A, B and C.

In Figure 3, three scenarii are proposed in function of the surface of control of the RFID system. If the surface is too wide (case A), the detection can be penalized by the weak magnetic coupling between the reader loop and the tag coil. If this surface is too small (case C), the detection can suffer from the two high relative distance between the tag equivalent area and the reader loop area, decreasing the magnetic coupling. Also, the time spend to perform the control of the entire beach is directly proportional to the inverse of the surface area. Optimal case B suppose that the depth of the pebbles is evaluated and help in designing the area size of the reader loop. As it is difficult to evaluate precisely a reference depth, an interval of 4 cm to 40 cm is supposed, implying us to find a solution involving the combination of different reader loop sizes. Also the relative orientation of the glasstag can be overcome thanks to the complementary-loops structures for which the possibility of mutual coupling in both horizontal and vertical modes are higher than those of the single and multiple "sub-loops in-phase" ones.

A. *Complementary-loops structure*

The orientation of the tag brings a challenge on the detection performances. The complementary loops structure can help in the reduction of sensitivity due to the mode of detection. To illustrate this assumption, simulations of the mutual induction generated between a small circular tag and rectangular reader loops are performed with MATLAB. The calculus consists in generating the magnetic induction distribution in the space and summing the vectorial components orthonormal to a given delimited surface,

following the definition of the induced magnetic flux. In Figure 4, the simulation setup is shown and we identified three scenarii with the same rectangular reference surface of 10x20 cm². The surface (a) corresponds to the classical single turn rectangular loop. Surface (b) and (c) corresponds to the use of sub-loops of 10x10 cm² for, respectively, in-phase loops and complementary loops (i.e. out-of-phase) structures.

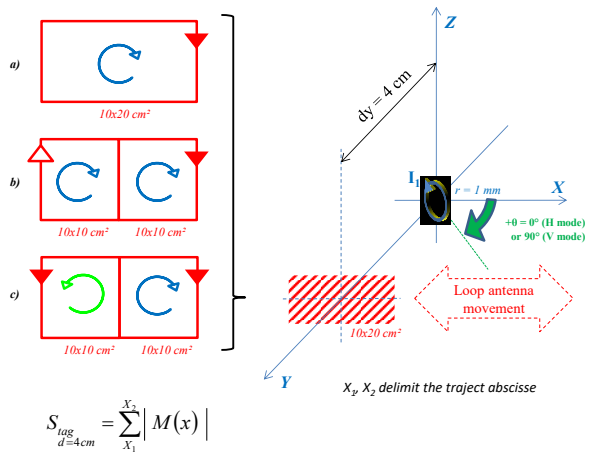

Figure 4 : Simulation of the complementary-loops structure in the case of an equivalent circular surface (radius 1mm) and 3 reader loop cases. Definition of the S factor.

In order to quantify the ability of such structures for detection the tag at a fixed distance (4 cm herein), we defined the factor S as the sum of the mutual inductance absolute value for a given displacement of the tag. This S factor is evaluated for quantifying, at a given distance of the reader loop, the amount of mutual induction available for potential position of the tags. Results of mutual coupling evaluation and S factor are reported in Figure 5 and Figure 6.

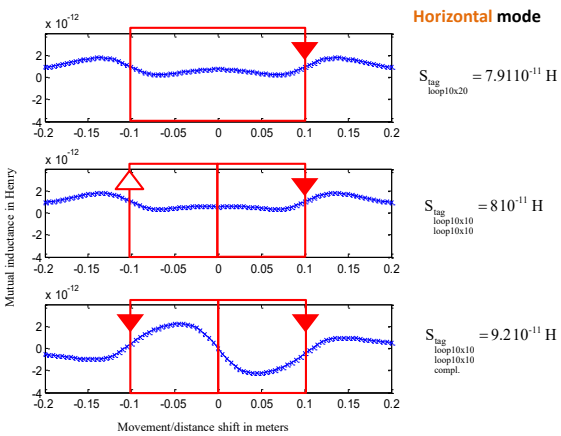

Figure 5 : Mutual induction, in horizontal mode, for the three rectangular loops cases in Figure 4, and evaluation of the S factor.

The results reported in Figure 5 and Figure 6 shows that the case (c) corresponds to the best case in regards of the S factor. In horizontal mode, the case (b) does not improves the case (a) because the distribution of the magnetic field are destructive at the middle of the surface, preventing a potential mutual coupling. To the contrary, the case (c) corresponds to a constructive addition of the magnetic field generated by the two complementary loops, in horizontal and vertical modes. Additionally, the vertical mode does not suffer from the used nul of magnetic coupling at the middle of the rectangular surface, as seen for case (b) in Figure 6. The values of S factor, increasing for the complementary loops structure, are due to the fact that extrema of the "M" values are higher for the case (c) not only at specific position but over the surface.

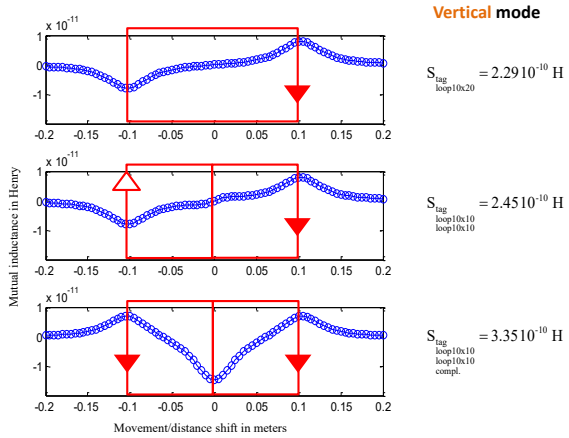

Figure 6 : Mutual induction, in vertical mode, for the three rectangular loops cases in Figure 4, and evaluation of the S factor.

Nevertheless these results are only concerning a fixed distance between the tag and the reader loops, it can be noticed the important benefit of using complementary loops for reducing the sensitivity to the tag orientation.

B. *Switching the reader loops of different sizes*

It was shown in the previous part that complementary loops structures are fruitful, at a given distance of detection. As was studied in [4][5], the optimal size of a rectangular reader loop depends on the tag size and the distance fixed for the detection, that is to say the depth in our context. As the depth can be from 4 to 40 cm, we decide to increase the surface of the reader loop and to superpose different reader loops whose structures are made of complementary loops, as it is represented in Figure 7.

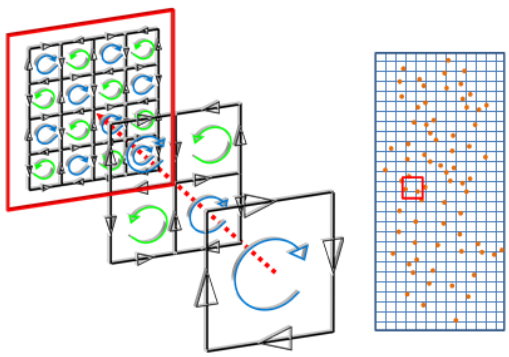

Figure 7 : Superposition of the different reader loops

The three structures chosen are all included in a reference surface of 40x40 cm (as it is the maximum depth) and we fixed the classical single turn 40x40 cm² loop and its sub-division by a factor 2 and 4, respectively, the 4x(20x20) cm² C-loop (complementary loop) and the 16x(10x10 cm²) C-loop. The magnetic field simulations, with CST studio, of these structures are seen in Figure 8.

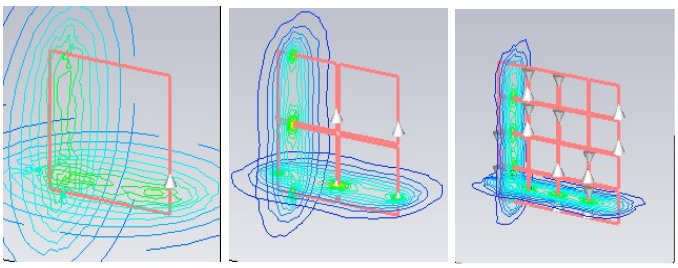

Figure 8 : Magnetic field magnitude, with CST studio, for the single turn 40x40 cm² loop, the 4x(20x20) cm² C-loop and the 16x(10x10 cm²) C-loop.

The simulations results in Figure 8 are obtained for an arbitrary current of 1A and the color ramp is clamped at the same level for the three simulations. As it can be seen, the magnetic field magnitude is concentrated near the edges, and the curvature radius increase with the inverse of the sub-loop area. This potentially creates some zeros of detection for the larger loops, which can be compensated by using the sub-loops under the hypothesis of a not too deep tag. The prototype of such a structure involves turning the wire of the loop in order to respect the phase of the current from one sub-loop to another. The next part describes how the prototype is realized for combining switched reader loops and sub-loops.

III. Prototyping and Tests

To benefit from the sub-loop structure detection performances (in terms of sensitivity to the tag orientation), the complementary loops are realized line by line and column by column following the method depicted in Figure 9. This method has the advantage of making a line of "n" sub-loops for which the electrical port is on the same side of the surface, which highly simplify the practical realization of the prototype and avoid some penalizing extr-length of wire (loss…). In this figure, the equivalent electrical schematic for the case of two and "n" sub-loops is draw in the idea to evaluate the analytical approximation of the inductance seen by the RFID reader. The formula given considers the mutual coupling of sub-loops only between two adjacent loops and neglect the other possible coupling. The result of this hypothesis is that the equivalent inductance seen by the reader for a line (or a column) of complementary sub-loops is proportional to the number of sub-loops.

As each reader loop, and each of the lines and columns of the complementary loops structure is switched, the evaluation of the inductance is mandatory to be adapted to the RFID reader. The prototype is realized with Litz wire (to reduce losses), and the inductance is adapted to 26 µH, which is the value given in the datasheet of the TIRIS 134 kHz RFID reader. Photography of the prototype realized over a wood structure is seen in Figure 10, in which the RFID reader and the different mechanical switches can be seen.

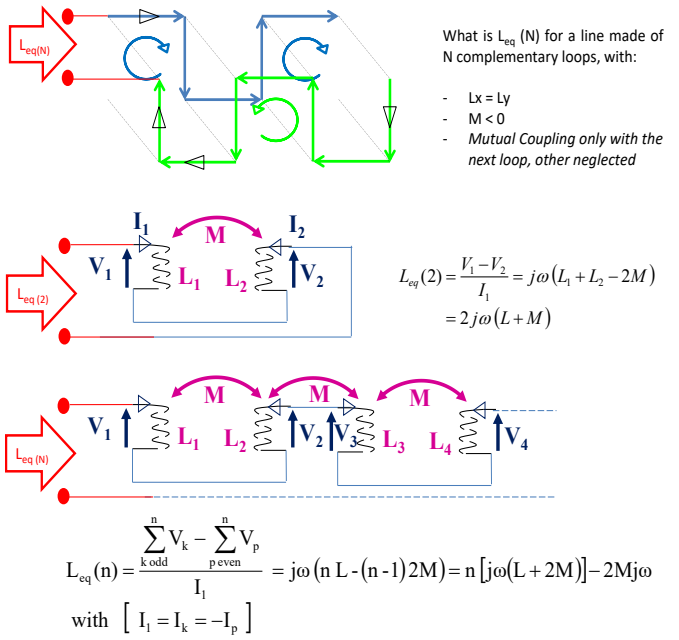

Figure 9 : method for turning a line of "n" complementary loops, and equivalent electrical schematic for determining the inductance value.

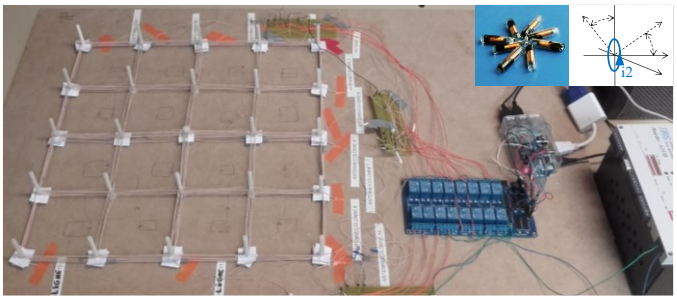

Figure 10 : Prototype of the switched RFID reader loops and lines/columns of complementary sub-loops

Results of detection are shown in Figure 11 for the two mode of detection, horizontal and vertical, and for three cases: (i) the single turn coil (40x40) and, in the idea to reduce the amount of data, only one line and one column of the two others structures (ii) and (iii). This selection of a line and a column can be clearly seen in the figure.

As was predicted in simulation with CST in the previous part, the wide loop presents some zeros of detection for the vertical mode, see the figure at top right and middle right. Also, the horizontal mode benefit from the small C-loops because the detection range near the edges of the reference surface is higher these structures than for the single turn. By mixing the results of horizontal and vertical modes, the ability to detect arbitrarily orientated glasstag is possible at several centimeters, taking into account the fact that the line and column can be additionally swept.

The prototype uses a BANANA PI board for driving the switches, enabling an automated sweep in the range of some seconds, fruitful for a practical scanning of a given surface of the beach in the measurement campaign.

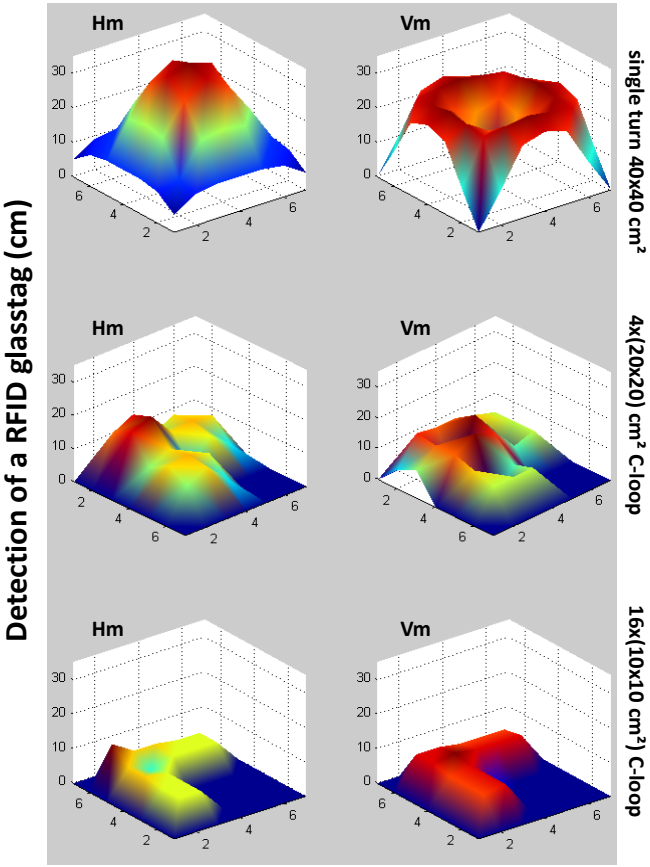

Figure 11 : Detection performances, in cm, of a RFID glasstag in horizontal (left) and vertical (right) mode, for the three structures: the single turn 40x40 cm² loop (top), the 4x(20x20) cm² C-loop (middle) and the 16x(10x10 cm²) C-loop (bottom)

IV. Conclusion

In this work, we presented a switched structure of single and complementary loops, whose interest is to improve the detection performances of RFID tags detection. Practical results showed that complementary loops enables to detect the RFID tags both in horizontal and vertical modes, as was predicted by simulation. Additionally, the use of switched structures increases the detection performances of the RFID tags at different depths, which are not known in the context of the project. Practical sweeping of all the switches, in the range of several seconds, are done with a simple BANANA PI in the measurement. To conclude, RFID tag detection can be improved by using this structure, because the switched configuration enables the detection at different optimal depths, at different sub-areas, and for the two possible modes (Hm and Vm). This increases the possibility of detection over the area.

Acknowledgment

The authors want to thanks Joachim Fert for the valuable work concerning the final prototyping.

References

[1] D. Paret. Identification Radio-Fréquences et Cartes à puce sans contact. *Dunod, Paris, 2000*.

[2] K. Finkenzeller. RFID handbook, fundamentals and applications in contactless cards and identifications. *2nd ed., Wiley and Sons, 2003*.

[3] G. Benelli, A. Pozzebon, D. Bertoni, G. Sarti, An RFID-based toolbox for the study of under- and outside-water movement of pebbles on coarse-grained beaches. *IEEE Journal of Selected Topics in Applied Earth Observations and Remote Sensing 5, pp. 1474-1482, Oct. 2012*

[4] M. Grzeskowiak and al. Pebbles Tracking Thanks to RFID LF Multi-loops Inductively Coupled Reader. *Progress In Electromagnetics Research, PIER C, ISSN: 1937-8718, N°55, pp. 129-137, 2014*.

[5] A. Diet and al. 'Improving LF Reader Antenna volume of detection for RFID token tag thanks to Identical Coaxial Loops (ICLs) and in/out-of phase multiple-loops structures' *IEEE Int. Conference on RFID-Technology and Applications, 2014 September 8-9, Tampere, Finland*

[6] M. Ahmad, A. Mohan. Multiple-bridge-loop RFID Reader Antenna for improved Positioning and localisation. *Electronics Letters, Vol. 48, n°16, August 2012*.

[7] Imura. T.; Hori. Y, "Maximizing air gap and Efficiency of Magnetic Resonant Coupling for Wireless Power Transfer using Equivalent Circuit and Neumann formula", *IEEE Transaction. on Industrial. Electronics.*, vol.*58*, pp.4746–4752, 2011

[8] C. Zierhofer, E. Hochmair. Geometric approach for coupling enhancement of magnetically coupled coils. *IEEE transacions on Biomedical Engineering, Vol. 43, n°7, pp. 708-714, July 1996.*